300-615 Q&As

Troubleshooting Cisco Data Center Infrastructure (DCIT)

Pass Cisco 300-615 Exam with 100% Guarantee

Free Download Real Questions & Answers **PDF** and **VCE** file from:

https://www.pass4itsure.com/300-615.html

100% Passing Guarantee
100% Money Back Assurance

Following Questions and Answers are all new published by Cisco Official Exam Center

- **Instant Download** After Purchase
- **100% Money Back** Guarantee
- **365 Days** Free Update
- **800,000+** Satisfied Customers

QUESTION 1

Refer to the exhibit.

```
n7k-1(config)# no role feature-group name test_feature_group1
ERROR: Feature group is in use. Can't remove the feature group
n7k-1(config)# show role | egrep role:|feature-group
  1       permit read-write feature-group        test_feature_group1
n7k-1(config)#
```

A network administrator must delete a feature group from a Cisco Nexus 5000 Series Switch. Which action resolves the issue?

A. Detach the association with the no rule command within the role configuration mode

B. Detach the association with the no role command within the feature-group configuration mode

C. Detach the association with the no rule command within the feature-group configuration

D. Detach the association with the no role command within the role configuration mode

Correct Answer: A

QUESTION 2

Refer to the exhibit.

```
Switch-B# show vpc
vPC domain id: 34
Peer status : peer adjacency formed ok
vPC keep-alive status : peer is alive
Configuration consistency status : success
Per-vlan consistency status : success
Type-2 consistency status : success
vPC role : primary, operational secondary
Number of vPCs configured : 49
Peer Gateway : Enabled
Peer gateway excluded VLANs: -
Dual-active excluded VLANs : -
Graceful Consistency Check: Enabled
Auto-recovery status: Enabled (timeout = 240 seconds)
```

After a failover occurs, which two actions must be performed on Switch-B to manually preempt the operational primary role back to Switch-A? (Choose two.)

A. Configure the local vPC role priority to have a lower value than Switch-A.

B. Configure the local vPC role priority to have a higher value than Switch-A.

C. Disable and then re-enable the vPC peer-keepalive link.

D. Configure the local vPC role priority to have the same value as Switch-A.

E. Disable and then re-enable the vPC peer link.

Correct Answer: BE

QUESTION 3

An engineer discovers that an NPV/NPIV uplink experiences a heavy load and plans to add more uplinks. What occurs when the new uplinks are added to the uplink?

A. Only new connections automatically use the new uplinks.

B. Paths must be defined before new connections use the new uplinks.

C. All connections must be reset before the new uplinks are used.

D. New and existing connections automatically use the new uplinks.

Correct Answer: D

QUESTION 4

Refer to the exhibit.

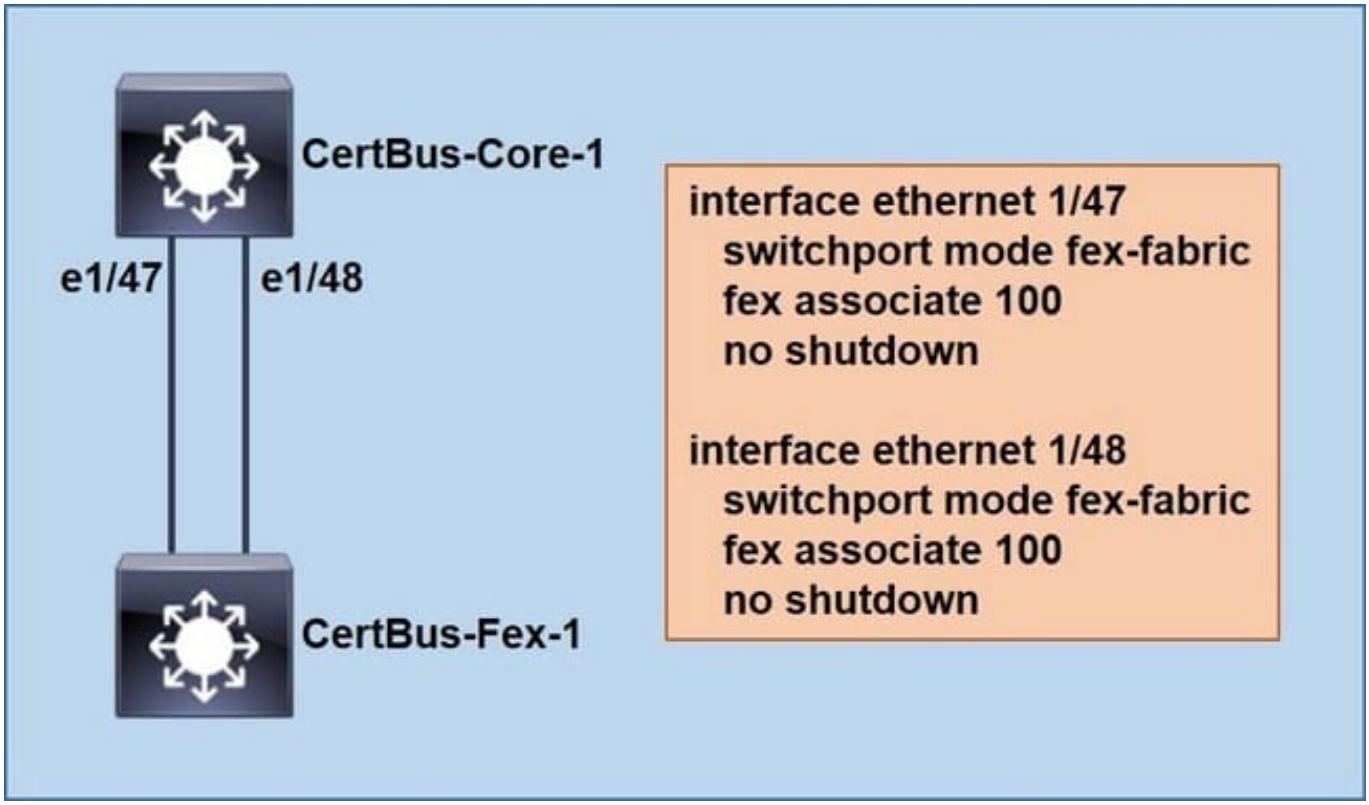

An engineer must connect CertBus-Fex-1 and CertBus-Core-1 so that the traffic flow between the two devices uses load balancing. After inspecting the statistics of the interconnecting interfaces, the engineer concludes that only one link is used. Which action resolves the problem?

A. Configure source-destination load balancing on CertBus-Core-1.

B. Configure each uplink to be a member of a separate LACP port channel.

C. Configure the pinning max-link as 2.

D. Configure destination-mac load balancing on CertBus-Core-1

Correct Answer: C

https://www.cisco.com/c/m/en_us/techdoc/dc/reference/cli/n5k/commands/pinning-max-links.html

QUESTION 5

Refer to the exhibit.

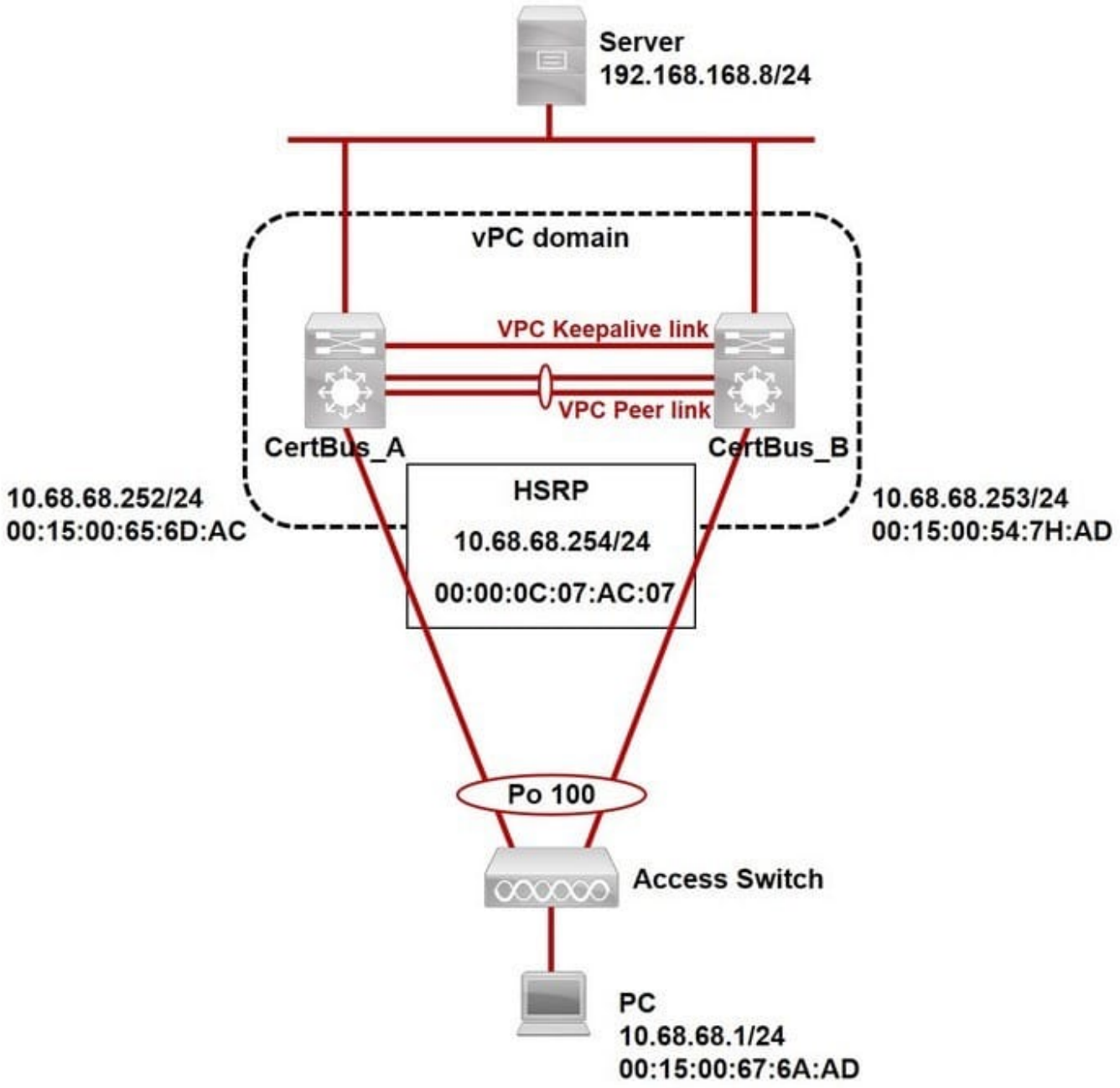

A PC belongs to VLAN 68 The user experiences a large amount of packet loss when communicating with hosts that are outside of VLAN 68. Which action resolves the problem?

A. Replace HSRP with GLBP

B. Enable the peer-gateway feature

C. Remove the HSRP configuration

D. Configure ip arp synchronization on both switches.

Correct Answer: B

I assume that the PC is sending traffic with destination MAC of Nexus physical interfaces. If more snap shots about this question are available, please share.

QUESTION 6

An engineer is troubleshooting a fabric discovery failure. Which two requirements must an engineer verify about switch connectivity to solve the problem? (Choose two.)

A. A Cisco APIC must be attached to a spine node only.

B. A Cisco APIC must be attached to leaf nodes.

C. Spine nodes must connect to other spine nodes.

D. A Cisco APIC must be dual-attached to two separate spine nodes.

E. Leaf nodes must connect to spine nodes only.

Correct Answer: BE

QUESTION 7

Refer to the exhibit.

```
Nexus# show install all impact system bootflash:///n5000-uk9.7.1.4.N1.1.bin

<...>
Extracting "bios" version from image bootflash:/n5000-uk9.7.1.4.N1.1.bin.
[[####################] 100% -- SUCCESS

Extracting "fexth" version from image bootflash:/n5000-uk9.7.1.4.N1.1.bin.
 [####################] 100% -- SUCCESS

Recommended action::
"Module 1 3 might not be supported in the new image,
it should be powered off before proceeding with install".

Performing module support checks.
[####################] 100% -- SUCCESS

Compatibility check is done:
Module bootable Impact Install-type Reason
------ -------- -------------- ------------- -------
1 no disruptive reset ISSD is not supported and switch will reset with ascii
configuration
3 no n/a n/a Incompatible image
105 yes disruptive reset ISSD is not supported and switch will reset with ascii
configuration
```

```
Nexus# show module
Mod Ports Module-Type Model Status
--- ----- -------------------------- ------------ ---------------
1 32 02 32X10GE/Modular Universal Platfo N5K-C5548UP-SUP active *
3 0  02 Daughter Card with L3 ASIC N55-D160L3-V2 ok

Mod Sw  Hw  World-Wide-Name(s)  (WWN)
--- ------------------ ----- --------------------------------------
1 7.3(4) N1(1) 1.0 - -
3 7.3(4) N1(1) 1.0 - -

Nexus# show fex
FEX FEX FEX FEX Fex
Number Description State Model Serial
------------------------------------------------------------
105 FEX0105 Online N2K-C2248TP-1GE FOX1938GPUY
Nexus# sh incompatibility-all system bootflash:///n5000-uk9.7.1.4.N1.1.bin

The following configurations on active are incompatible with the system image

1) Service : nxapi, Capability : CAP_FEATURE_NXAPI
Description : NX-API is enabled.
Capability requirement : STRICT
Enable/Disable command : Disable NX-API with the command: "no feature nxapi"
```

A switch is being downgraded to an earlier release because of a problem with the current release. After the switch is downgraded, it can no longer forward traffic. Which action resolves the issue?

A. Enable ISSD after the downgrade is complete.

B. Roll back to the original image.

C. Reload the switch.

D. Shut and no shut the interfaces to the FEX.

Correct Answer: B

QUESTION 8

Refer to an exhibit.

```
N5k-A-199# sh install all impact system
N5000-uk9.7.1.4.N1.1.bin kickstart
N5000-uk9-kickstart.7.3.4.N1.1.bin
Verifying image bootflash:/n5000-uk9-
kickstart.7.3.4.N1.1.bin for boot
variable "kickstart".
[####################] 100% -- SUCCESS
Verifying image bootflash:/n5000-
uk9.7.1.4.N1.1.bin for boot variable
"system".
[# ] 0% -- FAIL. Return code 0x4045001F
(image MD5  checksum error).
Install has failed. Image verification
failed (0x40930011)
```

An engineer is troubleshooting an upgrade failure on a switch. Which action resolves the issue?

A. Save the system image in NVRAM.

B. Use the same system image as the kickstart image.

C. Load a new system image.

D. Reload the same system image.

Correct Answer: C

QUESTION 9

Refer to the exhibit.

```
N9K# show running-config eem

!Command: show running-config eem
!Running configuration last done at: Sun Jun  7 10:03:14 2020
!Time: Sun Jun  7 10:03:32 2020

version 9.2(2) Bios:version 05.33
event manager applet ConfigMgmt
  event cli match "copy running-config startup-config"
  action 2 syslog priority warnings msg Configuration Modified


N9K# copy run start
% Command blocked by event manager policy
```

An engineer must save the running configuration to startup-config and generate a syslog message indicating that the configuration was modified, but an error was received. Which action resolves the issue?

A. Change the syslog action number to 1.

B. Use the extended command copy running-config startup-config.

C. Add event-default as a second action of the EEM script.

D. Save the configuration using a user with network-admin role.

Correct Answer: C

QUESTION 10

Refer to the exhibit.

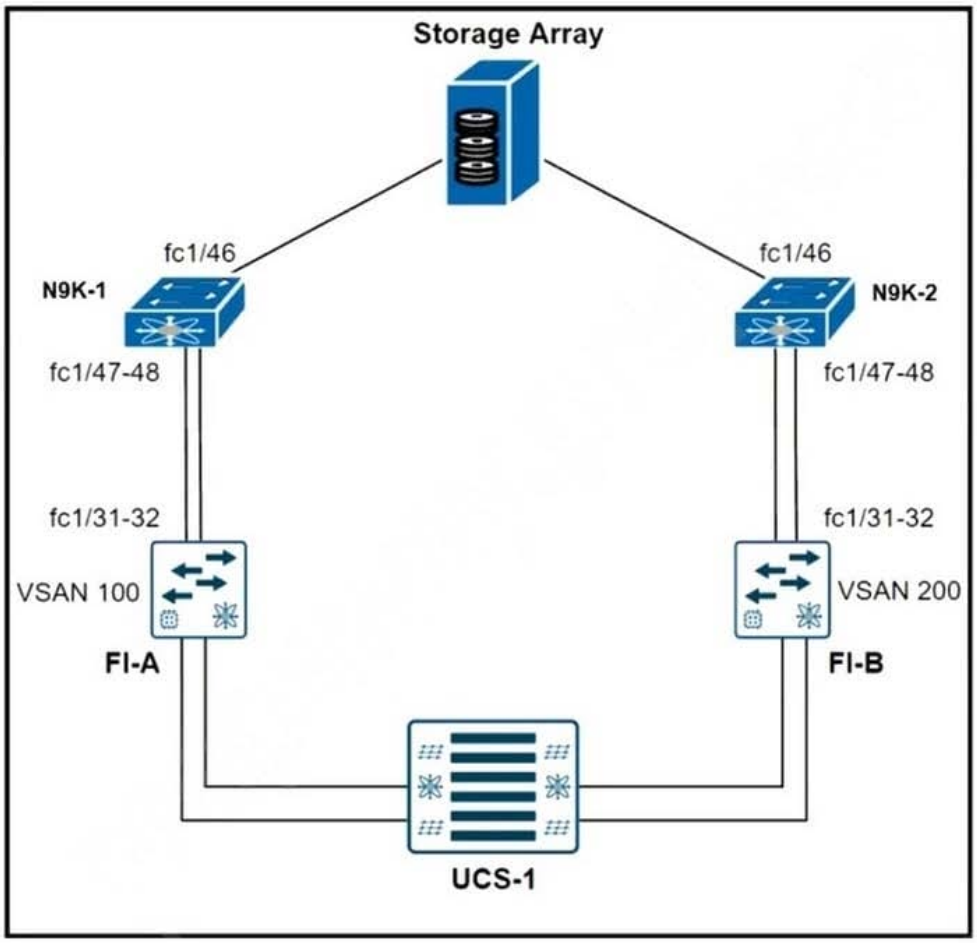


```
UCS-1-FI-A#
 adapter 1/2/1 (fls) :1 # lunlist
   vnic: 14 lifid: 4
        - FLOGI State: flogi est (fc_id 0xd30022)
        - PLOGI Sessions
                - WWN 21:00:00:1a:32:04:32:23 WWNP 21:00:00:1a:32:04:32:23 fc_id 0x000000
                 - LUN's configured (SCSI Type, Version, Vendor, Serial No.)
                        LUN ID: 0x0000000000000000 access failure
        - REPORT LUNs Query Response
        - Nameserver Query Response
```

A blade server on UCS-1 fails to boot from SAN. The PWWNs of the server and the target device are in the fabric login database of the N9K-1. Which set of actions resolves the issue?

A. Configure zoning and activate the zone set.

B. Reset HBA adapter 1/2/1 to reinitiate FLOGI.

C. Set fabric binding based on the initiator PWWN and target PWWN.

D. Define LUN masking on the storage array.

Correct Answer: D

QUESTION 11

A user reports that they cannot reach from a UCS server to an FC Storage array. Which command is used to test communication between an FCF and a target?

A. fcroute

B. traceroute

C. fcping

D. ping

Correct Answer: C

QUESTION 12

Refer to the exhibit.

```
nx-os9000-1# show guestshell detail
Virtual service guestshell+ detail
  State                    : Activated
  Package information
      Name                 : guestshell.ova
      Path                 : /isanboot/bin/guestshell.ova
      Application
        Name               : GuestShell
        Installed version  : 2.4(0.0)
        Description        : Cisco Systems Guest Shell
      Resource reservation
       Disk                : 250 MB
       Memory              : 256 MB
       CPU                 : 1% system CPU

nx-os9000-1# guestshell resize cpu 5
-- output omitted --
nx-os9000-1# guestshell resize rootfs 1500
-- output omitted --

nx-os9000-1# show guestshell detail
Virtual service guestshell+ detail
  State                    : Activated
  Package information
      Name                 : guestshell.ova
      Path                 : /isanboot/bin/guestshell.ova
      Application
        Name               : GuestShell
        Installed version  : 2.4(0.0)
        Description        : Cisco Systems Guest Shell
      Resource reservation
       Disk                : 250 MB
```

A network engineer deploys scripts to the guest shell of a Cisco Nexus switch. The scripts fail to operate properly due to the limited CPU and file system resources that are assigned by default to the guest shell. The engineer allocated more memory and disk space to the guest shell, but the application continues to fail. Which action resolves the issue?

A. Disable and enable bash shell

B. Reboot the guest shell

C. Redeploy the bash shell

D. Upgrade the guest shell

Correct Answer: B

Reference: https://www.ciscolive.com/c/dam/r/ciscolive/us/docs/2018/pdf/BRKDCN-2015.pdf

QUESTION 13

An engineer troubleshoots FCoE on a Cisco MDS 9000 Series Switch. What does this output indicate about port channel 1?

```
MDS-8# show interface port-channel 1
  port-channel1 is down (No operational members)
  Hardware is Fibre Channel
  Port WWN is 24:03:8c:60:4f:cf:7d:20
  Admin port mode is E, trunk mode is on
  snmp link state traps are enabled
  Port vsan is 1
  5 minutes input rate 192 bits/sec,24 bytes/sec, 0 frames/sec
  5 minutes output rate 0 bits/sec,0 bytes/sec, 0 frames/sec
    380454 frames input,702340532 bytes
      0 discards,0 errors
      0 invalid CRC/FCS,0 unknown class
      0 too long,0 too short
    381988 frames output,643629179 bytes
      0 discards,0 errors
    8370 input OLS,4088 LRR,0 NOS,0 loop inits
    6769 output OLS,6757 LRR, 4294 NOS, 1 loop inits
  Member[1] : fc1/1 [down]
  Member[2] : fc1/2 [down]
```

A. Port channel 1 is configured to connect to an NPIV switch.

B. Port channel 1 is configured to be an ISL.

C. Port channel 1 is configured to connect to an NPV switch.

D. Port channel 1 is configured to connect to a host bus adapter.

Correct Answer: B

QUESTION 14

In Cisco UCS Central you have a certificate that has the status set to Not Yet Valid. Which scenario could cause the issue?

A. The certificate field is empty.

B. The time is incorrectly synchronized.

C. The trusted point uses a bundled certificate that has a minimum depth of 10.

D. The certificate is issued by a different trusted point.

Correct Answer: B

QUESTION 15

An attempt to use a global vNIC redundancy template pair results in a service profile that fails to apply. Which action resolves the issues?

A. Create the peer names before creating the templates.

B. Assign the secondary template first, and then set the peer name.

C. Assign both templates simultaneously.

D. Assign the primary template first, and then set the peer name.

Correct Answer: D

Latest 300-615 Dumps 300-615 PDF Dumps 300-615 Exam Questions