NSE7_OTS-6.4 Q&As

Fortinet NSE 7 - OT Security 6.4

Pass Fortinet NSE7_OTS-6.4 Exam with 100% Guarantee

Free Download Real Questions & Answers **PDF** and **VCE** file from:

https://www.pass4itsure.com/nse7_ots-6-4.html

100% Passing Guarantee
100% Money Back Assurance

Following Questions and Answers are all new published by Fortinet Official Exam Center

Instant Download After Purchase
100% Money Back Guarantee
365 Days Free Update
800,000+ Satisfied Customers

QUESTION 1

Refer to the exhibit.

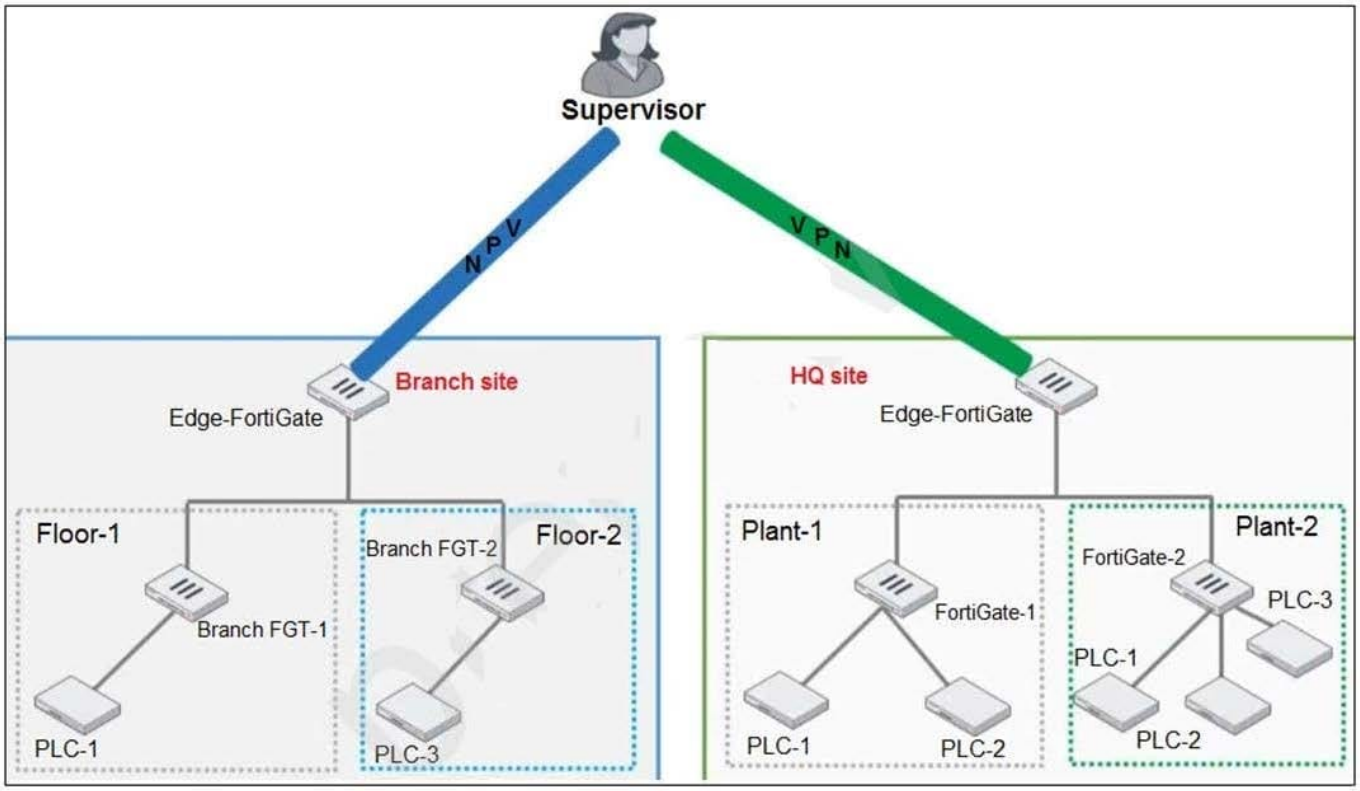

You need to configure VPN user access for supervisors at the breach and HQ sites using the same soft FortiToken. Each site has a FortiGate VPN gateway.

What must you do to achieve this objective?

A. You must use a FortiAuthenticator.

B. You must register the same FortiToken on more than one FortiGate.

C. You must use the user self-registration server.

D. You must use a third-party RADIUS OTP server.

Correct Answer: A

QUESTION 2

Refer to the exhibit.

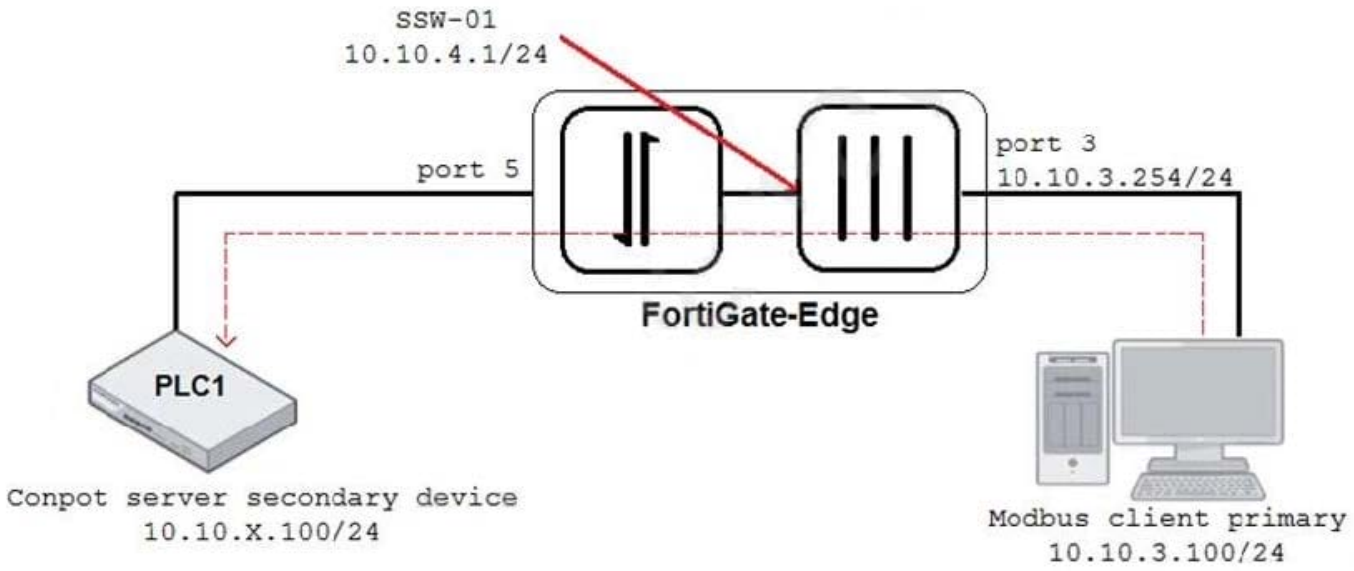

An OT architect has implemented a Modbus TCP with a simulation server Conpot to identify and control the Modus traffic in the OT network. The FortiGate-Edge device is configured with a software switch interface ssw-01.

Based on the topology shown in the exhibit, which two statements about the successful simulation of traffic between client and server are true? (Choose two.)

A. The FortiGate-Edge device must be in NAT mode.

B. NAT is disabled in the FortiGate firewall policy from port3 to ssw-01.

C. The FortiGate devices is in offline IDS mode.

D. Port5 is not a member of the software switch.

Correct Answer: AC

QUESTION 3

An administrator wants to use FortiSoC and SOAR features on a FortiAnalyzer device to detect and block any unauthorized access to FortiGate devices in an OT network.

Which two statements about FortiSoC and SOAR features on FortiAnalyzer are true? (Choose two.)

A. You must set correct operator in event handler to trigger an event.

B. You can automate SOC tasks through playbooks.

C. Each playbook can include multiple triggers.

D. You cannot use Windows and Linux hosts security events with FortiSoC.

Correct Answer: BC

QUESTION 4

You are investigating a series of incidents that occurred in the OT network over past 24 hours in FortiSIEM.

Which three FortiSIEM options can you use to investigate these incidents? (Choose three.)

A. Security

B. IPS

C. List

D. Risk

E. Overview

Correct Answer: CDE

QUESTION 5

An OT architect has deployed a Layer 2 switch in the OT network at Level 1 the Purdue model-process control. The purpose of the Layer 2 switch is to segment traffic between PLC1 and PLC2 with two VLANs. All the traffic between PLC1 and PLC2 must first flow through the Layer 2 switch and then through the FortiGate device in the Level 2 supervisory control network.

What statement about the traffic between PLC1 and PLC2 is true?

A. The Layer 2 switch rewrites VLAN tags before sending traffic to the FortiGate device.

B. The Layer 2 switches routes any traffic to the FortiGate device through an Ethernet link.

C. PLC1 and PLC2 traffic must flow through the Layer-2 switch trunk link to the FortiGate device.

D. In order to communicate, PLC1 must be in the same VLAN as PLC2.

Correct Answer: C

Latest NSE7_OTS-6.4 Dumps | NSE7_OTS-6.4 VCE Dumps | NSE7_OTS-6.4 Study Guide