# JN0-660 Q&As

Service Provider Routing and Switching, Professional

## Pass Juniper JN0-660 Exam with 100% Guarantee

Free Download Real Questions & Answers **PDF** and **VCE** file from:

**https://www.pass4itsure.com/jn0-660.html**

100% Passing Guarantee
100% Money Back Assurance

Following Questions and Answers are all new published by Juniper Official Exam Center

- **Instant Download** After Purchase
- **100% Money Back** Guarantee
- **365 Days** Free Update
- **800,000+** Satisfied Customers

**QUESTION 1**

Click the Exhibit button.

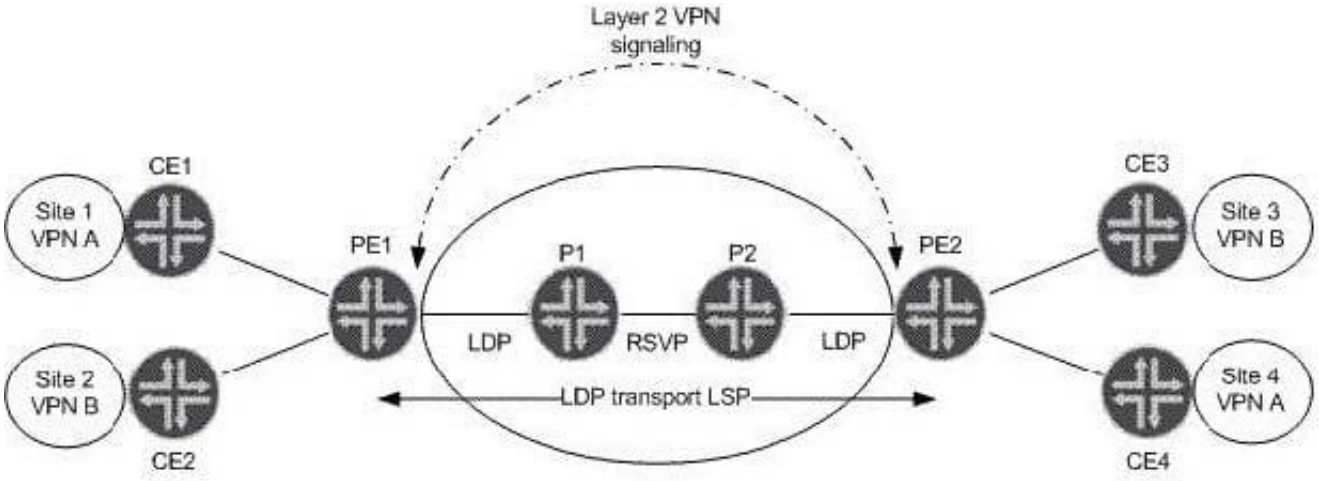


A LDP Layer 2 circuit is shown for VPN A and VPN B. LDP tunneling over RSVP is activated on P1 and P2. Referring to the exhibit, which statement is true about the LDP Layer 2 circuit?

A. MAC learning is needed and using the inner VPN label between PE1 and PE2 for VPN A or VPN B.

B. Targeted LDP sessions are established between PE1, P1 and P2, PE2.

C. Label stitching must be configured on P1 and P2 for end to end transport LSPs.

D. LDP must be enabled on the loopback interfaces of PE1 and PE2.

Correct Answer: D

**QUESTION 2**

Click the Exhibit button.

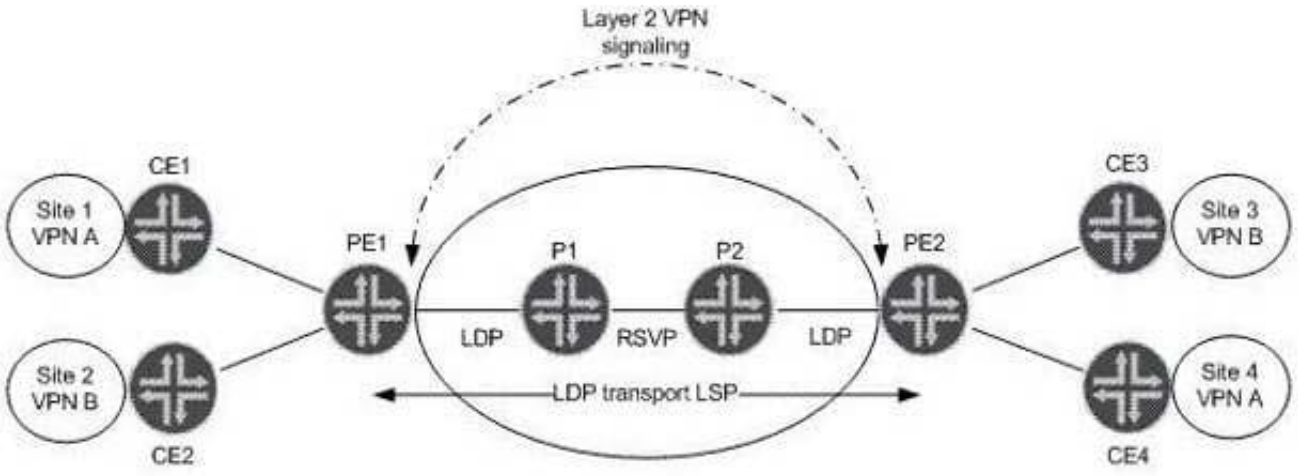

Referring to the exhibit, which statement is true assuming LDP VPN signaling?

A. PE1 uses the label value received from PE2 for VPN B as the inner label for VPN B.

B. PE2 uses the label value received from PE1 for VPN A as the transport label for VPN A.

C. P1 uses the label value for VPN A advertised by PE1, because RSVP is enabled.

D. PE1 uses the transport label value received for VPN A that is advertised by PE2 as the inner label for VPN A.

Correct Answer: A

**QUESTION 3**

Click the Exhibit button.

```
[edit]
user@host# run show route

inet.0: 7 destinations, 10 routes (6 active, 0 holddown, 3 hidden)
@ = Routing Use Only, # = Forwarding Use Only
+ = Active Route, - = Last Active, * = Both

10.10.10.0/30      *[Direct/0] 06:35:12
                    > via ge-1/0/0.0
10.10.10.2/32      *[Local/0] 06:35:12
                       Local via ge-1/0/0.0
10.10.56.0/30      *[Direct/0] 03:55:10
                    > via ge-1/0/1.0
10.10.56.2/32      *[Local/0] 03:55:10
                       Local via ge-1/0/1.0
192.168.56.1/32    @[IS-IS/18] 03:00:05, metric 10
                    > to 10.10.56.1 via ge-1/0/1.0
                   #[RSVP/7/1] 03:00:00, metric 10
                    > to 10.10.56.1 via ge-1/0/1.0, label-switched-path to-r6
192.168.56.5/32    *[Direct/0] 02:06:50
                    > via lo0.0

inet.3: 1 destinations, 1 routes (1 active, 0 holddown, 0 hidden)
+ = Active Route, - = Last Active, * = Both

192.168.56.1/32    *[RSVP/7/1] 03:00:00, metric 10
                    > to 10.10.56.1 via ge-1/0/1.0, label-switched-path to-r6
```

Referring to the exhibit, which MPLS feature was used to make the LSP the preferred path for internal routes?

A. traffic engineering bgp-igp

B. traffic engineering shortcuts

C. traffic engineering mpls-forwarding

D. install active

Correct Answer: C

**QUESTION 4**

-- Exhibit

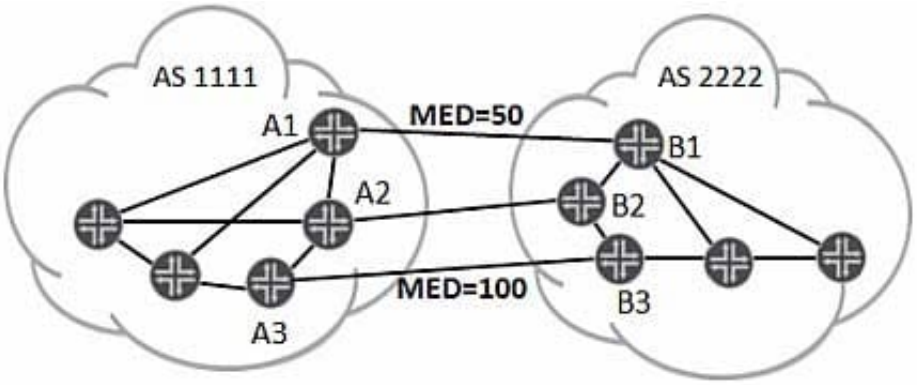


-- Exhibit -Click the Exhibit button.

You are the administrator for AS 1111 and you want to inform the neighboring AS to use router A2 as the ingress path into your local AS.

Referring to the exhibit, which policy statement action for the export policy on A2 will perform this task?

A. set policy-options policy-statement export term 10 then metric 120

B. set policy-options policy-statement export term 10 then external

C. set policy-options policy-statement export term 10 then metric 25

D. set policy-options policy-statement export term 10 then priority low

Correct Answer: C

**QUESTION 5**

Click the Exhibit button.

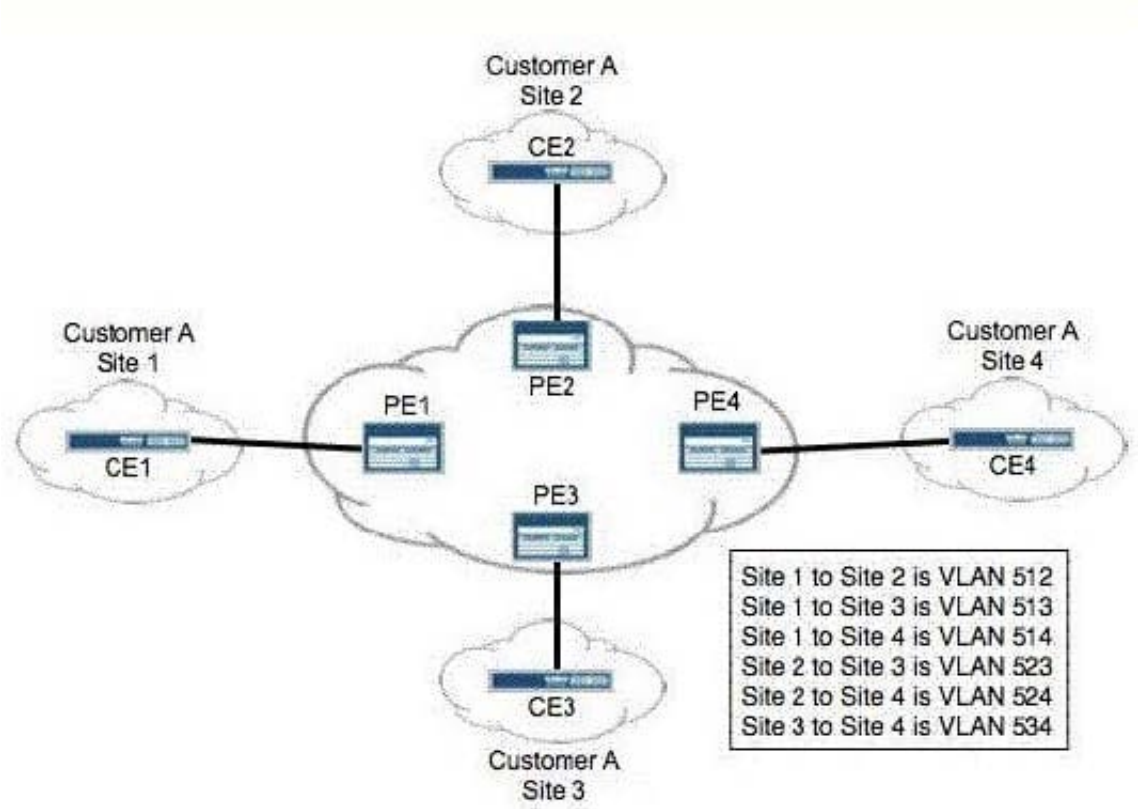


You are provisioning a full-mesh BGP Layer 2 VPN for Customer A. The customer has four remote sites in their network. Using best practices, you assigned interface unit numbers matching the assigned VLAN numbers. Which Layer 2 VPN configuration is correct for PE2?

A.
```
l2vpn {
    encapsulation-type ethernet-vlan;
    site CE2 {
        site-identifier 2;
        interface ge-0/0/0.523;
        interface ge-0/0/0.512;
        interface ge-0/0/0.524;
    }
}
```

B.
```
l2vpn {
    encapsulation-type ethernet-vlan;
    site CE2 {
        site-identifier 2;
        interface ge-0/0/0.523;
        interface ge-0/0/0.524;
        interface ge-0/0/0.512;
    }
}
```

C.
```
l2vpn {
    encapsulation-type ethernet-vlan;
    site CE2 {
        site-identifier 2;
        interface ge-0/0/0.512;
        interface ge-0/0/0.523;
        interface ge-0/0/0.524;
    }
}
```

D.
```
l2vpn {
    encapsulation-type ethernet-vlan;
    site CE2 {
        site-identifier 2;
        interface ge-0/0/0.512;
        interface ge-0/0/0.524;
        interface ge-0/0/0.523;
    }
}
```

A. Option A

B. Option B

C. Option C

D. Option D

Correct Answer: C

JN0-660 PDF Dumps JN0-660 Practice Test JN0-660 Study Guide