HPE2-Z39 Q&As

Fast Track - Applying Aruba Switching Fundamentals for Mobility

Pass HP HPE2-Z39 Exam with 100% Guarantee

Free Download Real Questions & Answers **PDF** and **VCE** file from:

https://www.pass4itsure.com/hpe2-z39.html

100% Passing Guarantee
100% Money Back Assurance

Following Questions and Answers are all new published by HP Official Exam Center

- **Instant Download** After Purchase
- **100% Money Back** Guarantee
- **365 Days** Free Update
- **800,000+** Satisfied Customers

QUESTION 1

Refer to the exhibit.

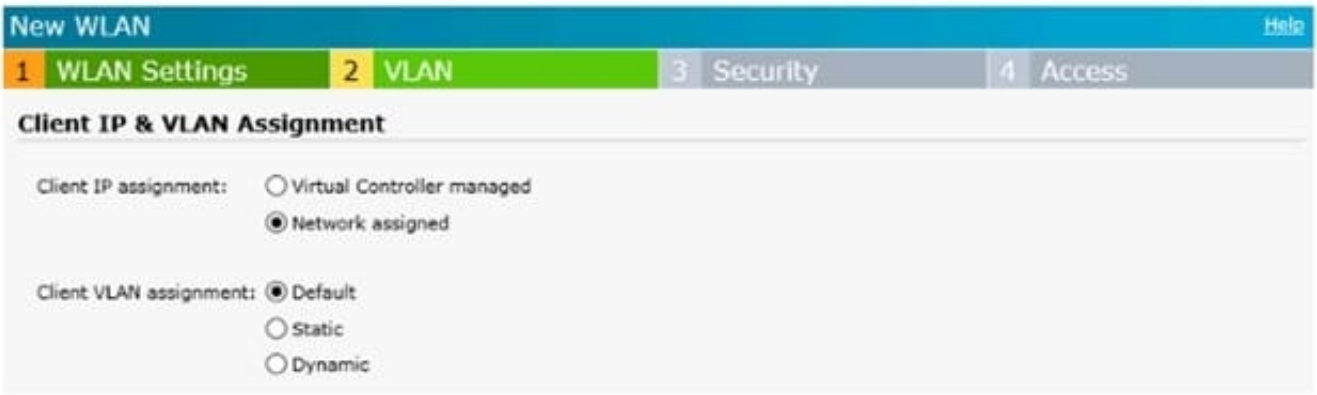

The exhibit shows settings for a WLAN on an Aruba Instant cluster. To which VLAN is wireless user traffic assigned?

A. to the VLAN defined for wireless users in Aruba AirWave

B. to the default VLAN on switches connected to the Instant APs

C. to the default VLAN defined in the System settings in the Instant UI

D. to the untagged VLAN on switch ports connected to the Instant APs

Correct Answer: D

QUESTION 2

A port on an ArubaOS switch has its default spanning tree settings. When is the port defined as a spanning tree edge port?

A. when the switch and the connected switch run MSTP but have different region settings

B. when the switch runs MSTP but the connected switch runs RSTP

C. when the port fails to receive BPDUs on the port within a set period of time

D. when the port is part of a VLAN that is dedicated to that port alone

Correct Answer: B

QUESTION 3

An ArubaOS switch has an LACP link aggregation with two links. How does the switch balance traffic over the links?

A. It assigns the first conversation (as defined by the load-balancing algorithm) to the first link, the second conversation to the second link, and so on, in a round-robin fashion.

B. It assigns the first packet to the first link, the second packet to the second link, and so on, in a round-robin fashion.

C. It assigns all traffic to the first link until the link reaches a bandwidth threshold; it then assigns traffic to the second link.

D. It assigns each conversation (as defined by the load-balancing algorithm) to a consistent link, based on a hash.

Correct Answer: B

QUESTION 4

A network administrator configures LLDP-MAD on an Aruba Virtual Switching Framework(VSF) fabric. The

administrator needs to enter an SNMP community string after v2c in this command:

Switch:(config) # vat lldp-rnad ipv4 10.1.0.2 v2c ----------Which SNMP community string should the administrator enter?

A. one configured on the device at 10.1.0.2

B. one configured for the VSF fabric on AirWave

C. one configured on the VSF fabric as a whole

D. one configured on the standby member in the fabric

Correct Answer: D

QUESTION 5

Refer to the exhibit.

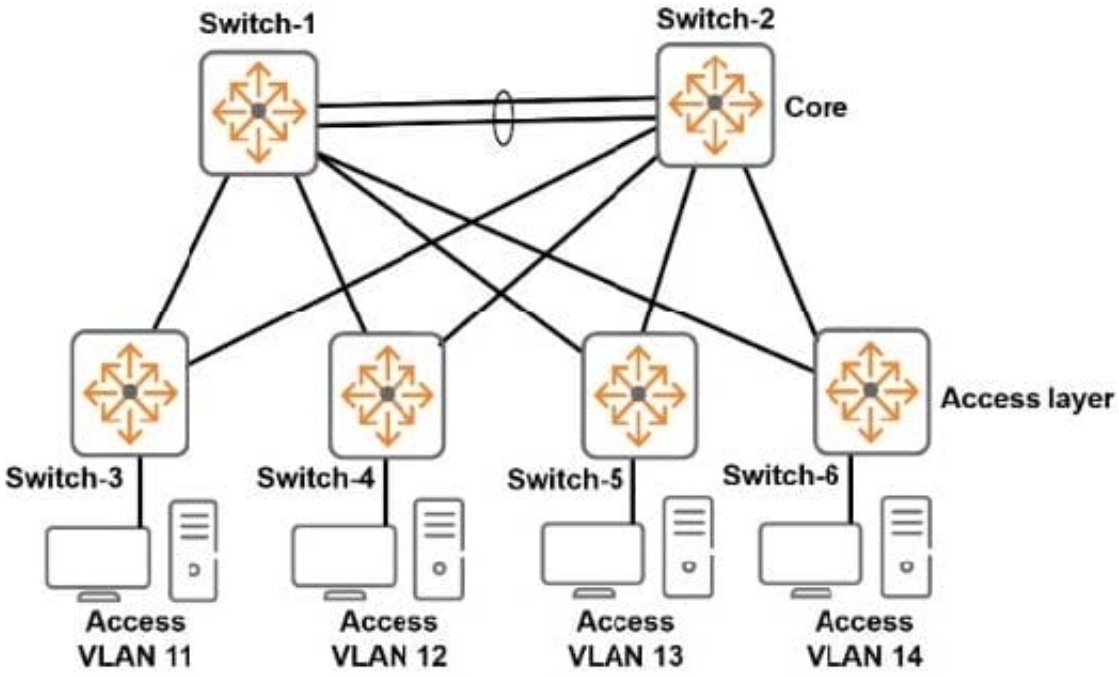

This exhibit shows the topology for a company campus LAN. Each access layer switch will be the default router for the devices connected to it. The company needs to permit the following:

1.

Communications between devices in an subnets

2.

Support for efficient traffic paths during normal operation and in situations in which a link fails

3.

Fast failover if a link fails

Which feature should the network administrator configure on the ArubaOS switches to support these requirements?

A. MSTP

B. RIP

C. Static Routes

D. OSPF

Correct Answer: A

Latest HPE2-Z39 Dumps HPE2-Z39 Exam Questions HPE2-Z39 Braindumps