H12-211 Q&As

HCIA-Routing & Switching V2.2

Pass Huawei H12-211 Exam with 100% Guarantee

Free Download Real Questions & Answers **PDF** and **VCE** file from:

https://www.pass4itsure.com/h12-211.html

100% Passing Guarantee
100% Money Back Assurance

Following Questions and Answers are all new published by Huawei Official Exam Center

- **Instant Download** After Purchase
- **100% Money Back** Guarantee
- **365 Days** Free Update
- **800,000+** Satisfied Customers

QUESTION 1

Refer to the graphic. OSPF is used on four routers that are in the same area and on the same network segment. In this scenario, OSPF selects one DR and multiple BDRs to ensure backup.

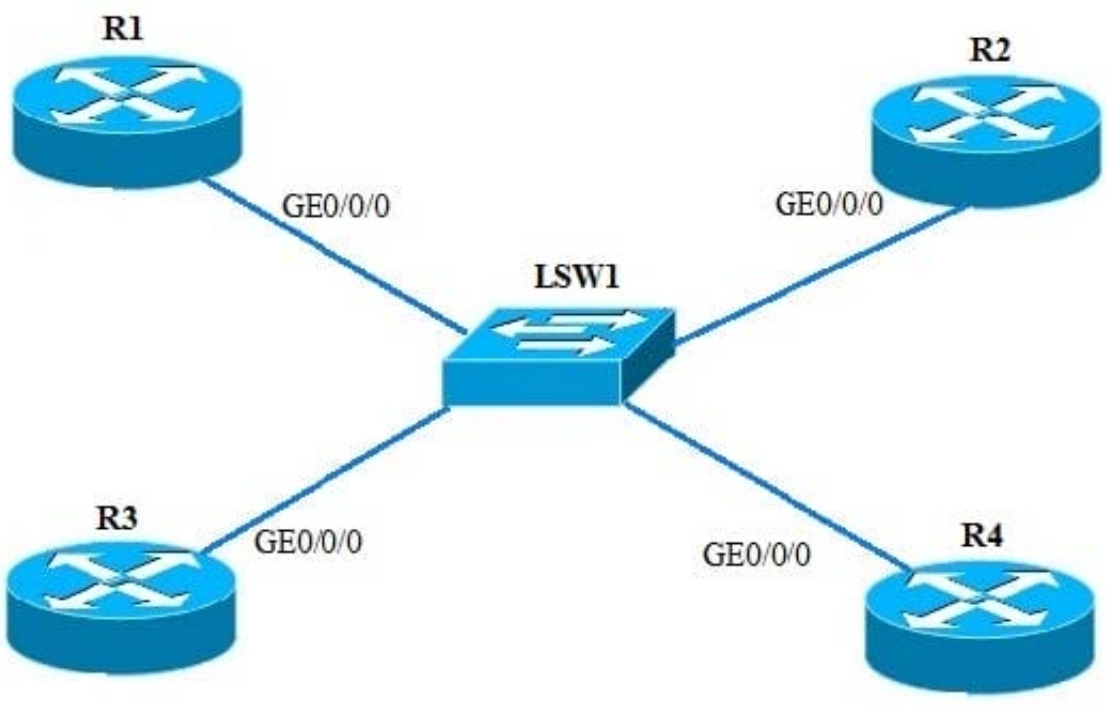

A. True

B. False

Correct Answer: B

QUESTION 2

The Tracert diagnostic tool records the () of each ICMP TTL timeout message, so that the user can be provided with the message to reach the destination. IP address.

A. Destination port

B. Source port

C. Destination IP address

D. Source IP address

Correct Answer: D

QUESTION 3

Refer to the graphic. RTA is a DTE device connected to a Frame Relay switch, and uses dynamic address mapping to establish the PVC. With regards to the configuration, which of the following commands are not necessary? (Choose two).

A. [RTA-Serial1/0/1]ip address 172.16.1.1 24

B. [RTA-Serial1/0/1]link-protocol FR

C. [RTA-Serial1/0/1]fr interface-type dte

D. [RTA-Serial1/0/1]fr inarp

Correct Answer: CD

QUESTION 4

As shown in the figure, all four switches run STP, and various parameters use default values. It is blocked

on the G0/0/2 port of the root switch C.

When a configuration BPDU is sent through this port, how long will the blocked port in the network enter

the forwarding state?

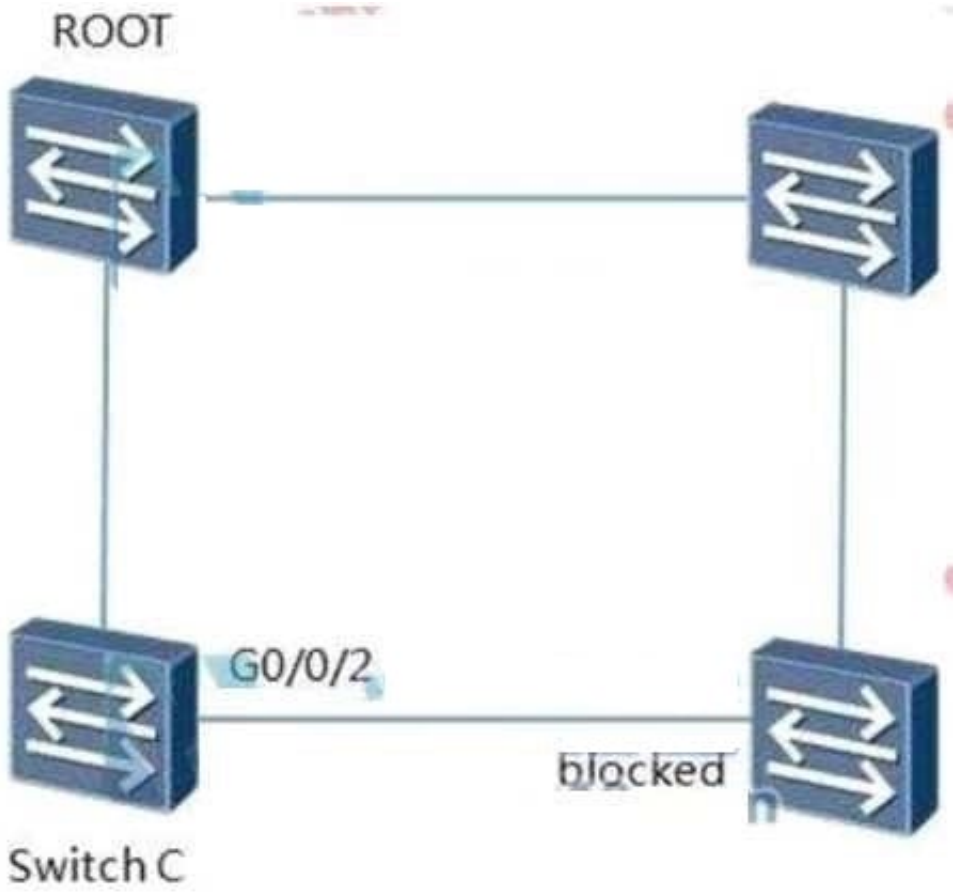

A. About 30 seconds

B. About 50 seconds

C. About 15 seconds

D. About 3 seconds

Correct Answer: B

QUESTION 5

As shown in the figure, regarding the topology and configuration of OSPF, the correct statement in the following statement is ()

A. R1 and R2 can establish stable OSPF neighbor relationships

B. R1 and R2 can establish stable neighbor relationships as long as the interface network type of R1 is restored to the default broadcast type.

C. As long as the interface network type of R1 is restored to the default broadcast type, and the hello time is adjusted to 10s, R1 and R2 can be established. Neighbor relationship

D. R1 Compared with R2, R2 has a better chance of becoming a DR because its interface DR priority value is relatively small.

Correct Answer: C

Latest H12-211 Dumps H12-211 Practice Test H12-211 Braindumps